ITV2090/2091 Series Electronic Vacuum Regulator



For the stepless control of vacuum pressure in proportion to electrical signals.

Piping/Wiring Diagram

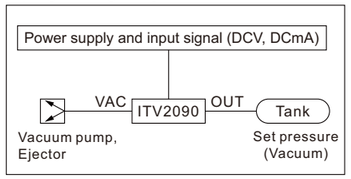

Ordering Code

ITV2090/2091 Series Electronic Vacuum Regulator

ITV 209 0 - 0 1 □ 2 □ S 5

Supply voltage
0: DC24V
1: DC12 to 15 V

Pressure range
9: -1.3 to -80 kPa

Input signal

0	Current type DC4 to 20mA (Sink type)
1	Current type DC0 to 20mA (Sink type)
2	Voltage type DC0 to 5V
3	Voltage type DC0 to 10V
40	4 points preset input
52	16 points preset input (Switch output/NPN output)
53	16 points preset input (Switch output/PIN output)

Monitor output

1	Analog output DC1 to 5V
2	Switch output/NPN output
3	Switch output/PNP output
4	Analog output DC4 to 20mA (Sink type)
Nil	None

Thread type
Nil: Rc
N: NPT
T: NPTF
F: G

Port size
2: 1/4

Bracket
Nil: Without bracket
B: Flat bracket
C: L-bracket

Cable connector type
S: Straight type 3 m
L: Right angle type 3 m
N: Without cable connector

Pressure display unit
5: kPa

ISO9001 CE
VPC PNEUMATIC®
ITV2090/2091 Series Electronic Vacuum Regulator

Specifications

Model		ITV2090	ITV2091
Min. supply vacuum pressure*1)		Set pressure -13.3 kPa	
Max. supply vacuum pressure		-101kPa	
Set pressure range		-1.3 to -80 kPa	
Power supply	Voltage	DC24V±10%	DC12 to 15V
	Current consumption	Power supply voltage DC24 V type: 0.12 A or less*6) Power supply voltage DC12 to 15 V type: 0.18 A or less	
Input signal	Current type*2)	DC4 to 20mA, DC0 to 20mA (Sink type)	
	Voltage type	DC0 to 5V, DC0 to 10V	
	Preset input	4 points (Negative common), 16 points (No common polarity)	
Input impedance	Current type	250Ω or less*3)	
	Voltage type	Approx. 6.5 kΩ	
	Preset input	Power supply voltage DC24 V type: Approx. 4.7 kΩ Power supply voltage DC12 V type: Approx. 2.0 kΩ	
Output signal (Monitor output)*4)	Analog output	DC1 to 5 V (Output impedance: Approx. 1 kΩ) DC4 to 20 mA (Sink type) (Output impedance: 250 Ω or less) Output accuracy ±6% F.S. or less	
	Switch output	NPN open collector output: Max. 30 V, 80 mA PNP open collector output: Max. 80 mA	
Linearity		±1% F.S. or less	
Hysteresis		0.5% F.S. or less	
Repeatability		±0.5% F.S. or less	
Sensitivity		0.2% F.S. or less	
Temperature characteristics		±0.12% F.S./℃ or less	
Output pressure display	Accuracy	±2% F.S. ±1 digit or less	
	Unit	kPa*5) Min. display: 1	
Working temperature		0 to 50℃ (No condensation)	
Enclosure		IP65	
Weight		350g	

*1) The min. supply vacuum pressure should be 13.3 kPa less than the max. vacuum pressure setting value.
*2) DC4 to 20 mA is not possible with the 2-wire type. Power supply voltage (DC24 V or DC12 to 15 V) is required.
*3) Value for the state with no over current circuit included. If an allowance is provided for an over current circuit, the input impedance varies depending on the input power supply. This is 350 Ω or less for an input current of DC20 mA
When measuring ITV analog output from DC1 to 5 V, if the load impedance is less than 100 kΩ, the analog output monitor accuracy of within ±6% (full span) may not be available. The product with the accuracy of within ±6% is supplied upon your request.
Output pressure remains unaffected.
*4) Either analog output or switch output must be selected. Furthermore, when switch output is selected, either NPN output or PNP output must also be selected. Use caution that the preset input type is not equipped with an output signal function.
*5) Please contact VPC regarding indication with other units of pressure.
*6) Refer to the table below for communication specifications.

ITV2090/2091 Series Electronic Vacuum Regulator

ITV209□ Series

Linearity

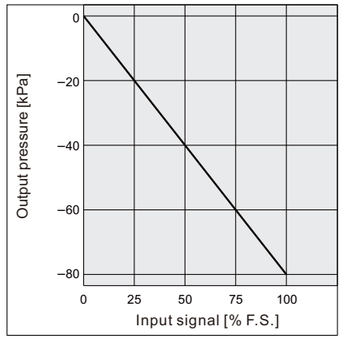

Hysteresis

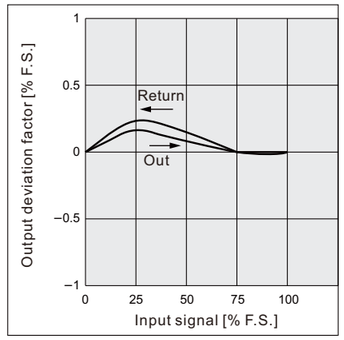

Repeatability

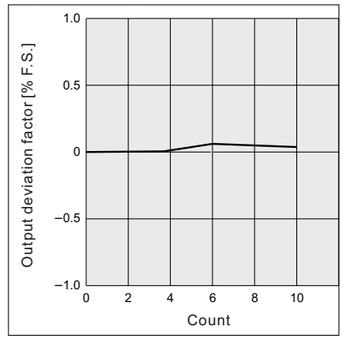

Pressure Characteristics

Set pressure: -20 kPa

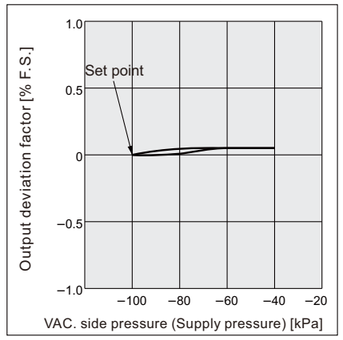

Flow Rate Characteristics

Supply vacuum pressure: −100 kPa

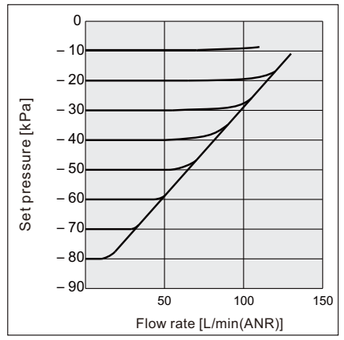

Flow rate characteristics measurement conditions

- Exhaust flow rate of the vacuum pump used for measurement: 500 L/min (ANR)
- Inlet vacuum pressure: −100 kPa [When outlet flow rate is 0 L/min (ANR)]
- Max. flow rate: 132 L/min (ANR) (With inlet vacuum pressure at −39 kPa)

ISO9001 CE
ITV2090/2091 Series Electronic Vacuum Regulator

Main Dimensions ITV209□

Flat bracket

* Do not attempt to rotate the cable connector, as it does not turn.

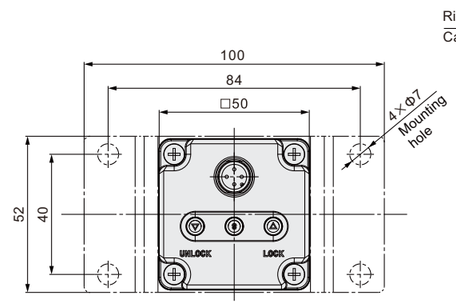

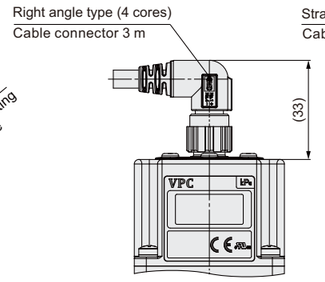

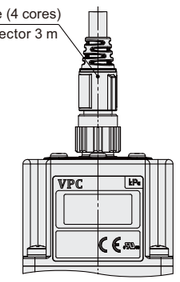

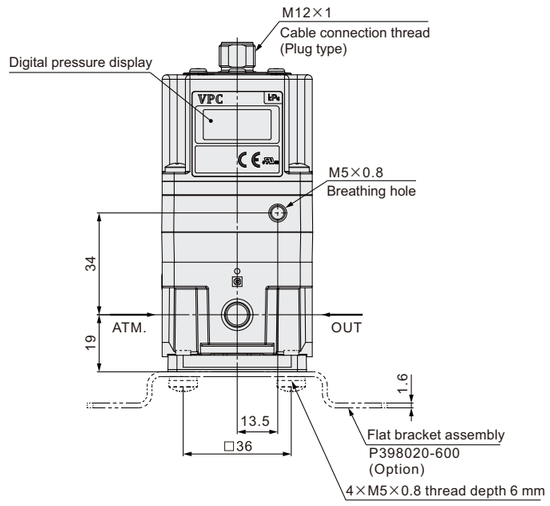

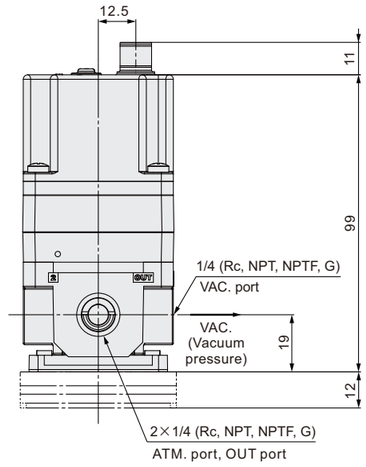

L-bracket

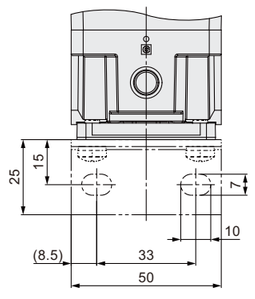

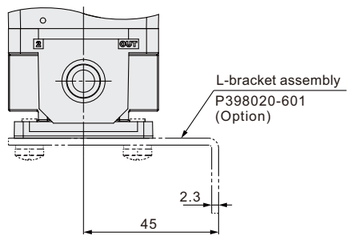

ITV2090/2091 Series Electronic Vacuum Regulator

Main Dimensions

16 points preset input

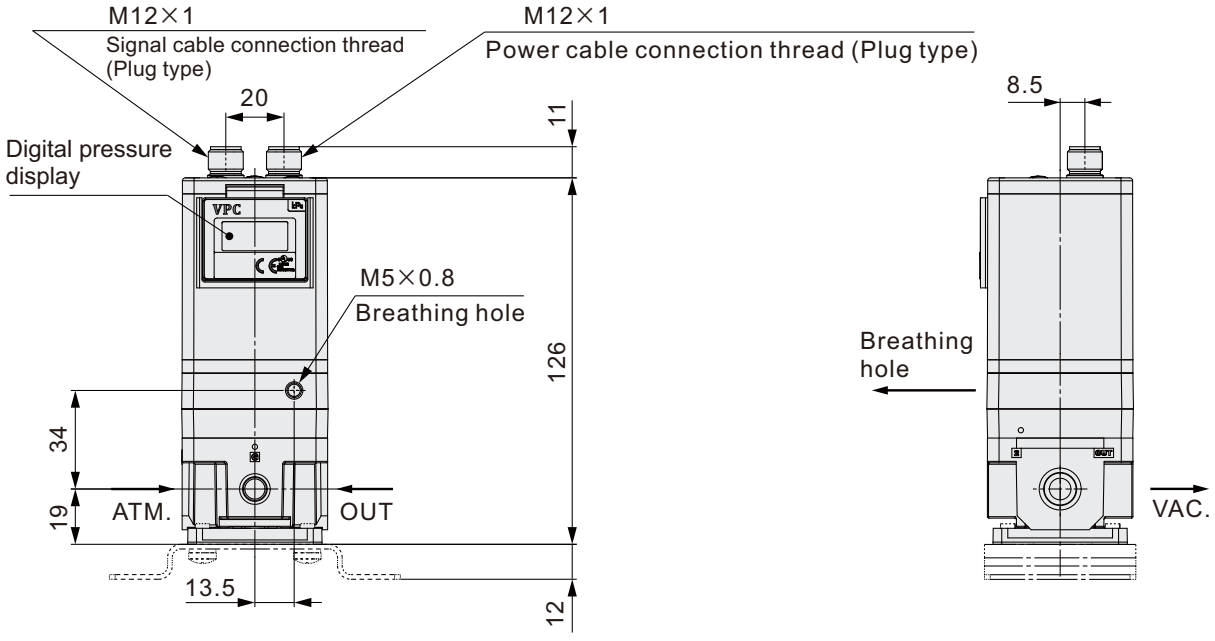

Accessory (Option)/Part Nos.

Description		Part No.
Flat bracket assembly (including mounting screws)		P398020-600
L-bracket assembly (including mounting screws)		P398020-601
Power cable connector (4 cores)	Straight type 3 m	P398020-500-3
	Right angle type 3 m	P398020-501-3

Flat bracket

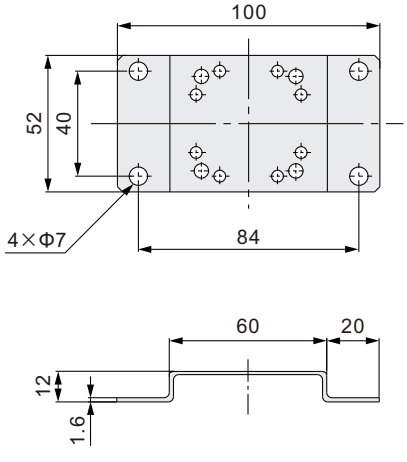

L-bracket

